manual

gs3

Imagine if the sky's the limit, what would the ultimate light duty/home machine be? That was the question La Marzocco set out to answer.
Years of research and development yielded the creation of a yet another standard setting espresso machine: the GS/3. With La Marzocco performance and technology, the GS/3 is designed for light commercial applications, including restaurants, offices, catering, or the ultimate home coffee bar. All the features and performance of a larger La Marzocco in a compact footprint.

la marzocco

handmade in florence

gs3

Operating Manual V1.3 - 09/2016
MAN.2.1.01

Chapters

1. General Information page 3
2. Accessories page 5
3. Machina Description page 6
4. Installation page 7
5. Operation page 12
6. Key Features page 14
7. Preventative Maintenance and Cleaning page 16
8. Maintenance and Periodic Cleaning Operations page 18
9. Installation Guide page 19
10. Software Programming Guide page 29

certifications available:

EN

la marzocco
handmade in florence

La Marzocco S.r.l.

Via La Torre 14/H
Località La Torre
50038 Scarperia e San Piero
(Firenze) - ITALIA

www.lamarzocco.com
info@lamarzocco.com

T: +39 055 849 191
F: +39 055 849 1990

WARNING

THIS MACHINE IS FOR PROFESSIONAL USE ONLY AND SHOULD BE INSTALLED IN LOCATIONS WHERE ITS USE AND MAINTENANCE IS RESTRICED TO TRAINED PERSONNEL. CHILDREN ARE FORBIDDEN TO OPERATE OR PLAY WITH THE MACHINE.

About this Manual

1) This operating guide is an integral and essential part of the product and must be supplied to users. Users are asked to read the enclosed warnings and cautions carefully, as they provide valuable information concerning safety during installation, operation, and maintenance. This manual must be kept in a safe place and be available for consultation to new and experienced users alike.

Remove Machine from Packaging

1) Ensure product's integrity by inspecting the packaging, making sure it presents no signs of damage which might have affected the enclosed machine.

2) Check the machine's integrity after having carefully removed the packaging. Packaging (boxes, plastic bags, foam parts and whatever else) must not be left within easy reach of children, due to the potential danger it represents, nor be discarded in the environment.

Safety Instructions

1) Check to see that data on the rating plate corresponds to those of the main electrical supply to which the machine will be attached.
This equipment must be installed to comply with applicable federal, state or local plumbing codes.

2) The installation must be performed according to local electrical and plumbing codes and regulations. The installation also must comply to the manufacturer's instructions, and must be performed by qualified and authorized personnel.

3) Incorrect installation may cause injury/damages to people, animals or objects, for which the manufacturer shall not be held responsible.

4) Safe electrical operation of this device will be achieved only when the connection to the power outlet has been completed correctly and in observance of all local, national, and international electrical codes and safety regulations, and particularly by grounding the unit. Make sure grounding has been done properly as it represents a fundamental safety requirement. Ensure qualified personnel check such connection.

5) Furthermore, you must ensure that the capacity of the available electrical system is suitable for the maximum power consumption indicated on the espresso machine.

6) We do not recommend using adapters, multiple plugs and/or extension cords. If you cannot avoid using them, make sure that they are exclusively of the kind which conforms to local, national, and international electrical codes and safety regulations, being careful not to exceed the power and current ratings indicated on such adapters and extension cords.

WARNING

THE MANUFACTURER DECLINES ANY RESPONSIBILITY FOR ANY EVENT LEADING TO LIABILITY SUITS WHENEVER GROUNDING HAS NOT BEEN COMPLETED ACCORDING TO CURRENT LOCAL, NATIONAL, AND INTERNATIONAL REGULATIONS AND ELECTRICAL CODES, OR OTHER ELECTRICAL PARTS HAVE BEEN CONNECTED IMPROPERLY.

7) This device must be used exclusively for the functions it has been designed and built for. Any other application is inappropriate and dangerous.
The manufacturer shall not be held responsible for any damages caused by improper and/or irrational use. This machine should not be installed in kitchens.

8) Using any electrical device requires that certain fundamental rules be observed. In particular:
- do not touch the device with wet or moist hands and feet
- do not use the device while not wearing shoes
- do not use extension cords in bath or shower rooms
- do not unplug the device from the power outlet by pulling on the power supply cable
- do not expose the device to atmospheric agents
- do not allow children or untrained people to use this device

9) Before performing any maintenance and/or cleaning operations (other than back-flushing the group), turn the main switch to the "O" or OFF position, and disconnect the machine from the electrical network by unplugging the cord or by switching off the relative circuit breaker. For any cleaning operation, follow exclusively the instructions contained in this manual.

WARNING

HAZARDOUS VOLTAGE DISCONNECT FROM POWER SUPPLY BEFORE SERVICING.

10) If the machine is operating in a faulty manner or stops working, disconnect it from the electrical network (as described in the preceding point). Do not attempt to repair it. Contact a qualified and authorized professional to perform any repair. Any repair must be performed exclusively by the manufacturer or by an authorized centre using only original parts. Non compliance with the above could compromise the safe operation of the machine.

WARNING

THE MACHINE MUST BE INSTALLED SO THAT QUALIFIED TECHNICAL PERSONNEL CAN EASILY ACCESS IT FOR MAINTENANCE.

11) In order to avoid dangerous overheating problems, it is recommended that the power supply cable be unfurled completely.

12) Do not obstruct air intake and exhaust grilles and, in particular, do not cover the cup warmer tray with cloths or other items.

Minimum room temperature: **5°C**
Maximum room temperature: **32°C**

13) The machine's power supply cable must not be replaced by users. In case the power supply cable becomes damaged, shut off the machine and disconnect the machine from the electrical network by unpluging the power cord or switching off the relative circuit breaker and close off the water supply; to replace the power supply cord, contact qualified professionals exclusively.

WARNING

THIS APPLIANCE IS NOT INTENDED FOR USE BY PERSONS (INCLUDING CHILDREN) WITH REDUCED PHYSICAL, SENSORY OR MENTAL CAPABILITIES, OR LACK OF EXPERIENCE AND KNOWLEDGE, UNLESS THEY HAVE BEEN GIVEN SUPERVISION OR INSTRUCTION CONCERNING USE OF THE APPLIANCE BY A PERSON RESPONSIBLE FOR THEIR SAFETY.

WARNING

IN ORDER TO PREVENT CRACKS OR LEAKAGE: DO NOT STORE OR INSTALL THE COFFEE MACHINE IN PLACES WHERE TEMPERATURE MAY CAUSE BOILER OR HYDRAULIC SYSTEM WATER FREEZING.

2. Accessories

Check the package to make sure that the following accessories are included in the packaging:

QTY.	PART NO.	DESCRIPTION
1	L111/2NAC	PORTAFILTER ASSEMBLY, DOUBLE SPOUT, S/STEEL
1	L111/1AC	PORTAFILTER ASSEMBLY, SINGLE SPOUT, S/STEEL
1	L115/C	PORTAFILTER BASKET, BLIND
1	F.3.029	PRECISION FILTER BASKET 7gr (SINGLE)
1	F.3.028	PRECISION FILTER BASKET 14gr (DOUBLE)
1	F.3.027	PRECISION FILTER BASKET 17gr
1	F.3.026	PRECISION FILTER BASKET 21gr
1	F.3.030/ F.3.031	TAMPER (ACCORDING TO MARKET)
1	UT003	HEX KEY, 5mm
2	L120/2A	WASHER, FLAT, SEALING TYPE, M6 (12X6.25X0.75)
1	V067	ESPRESSO MACHINE CLEANER
1	913 (CE) 914 (ETL)	WATER SUPPLY AND DRAIN CONNECTION KIT

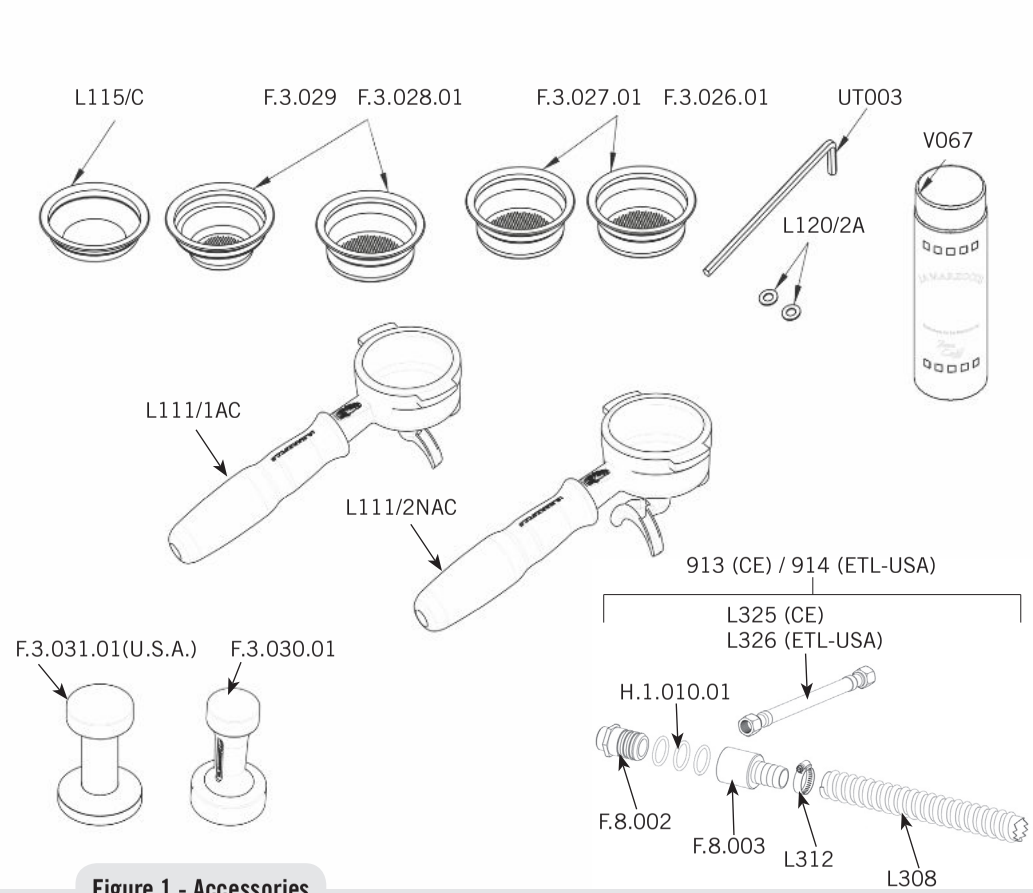

Figure 1 - Accessories

3. Machine Description

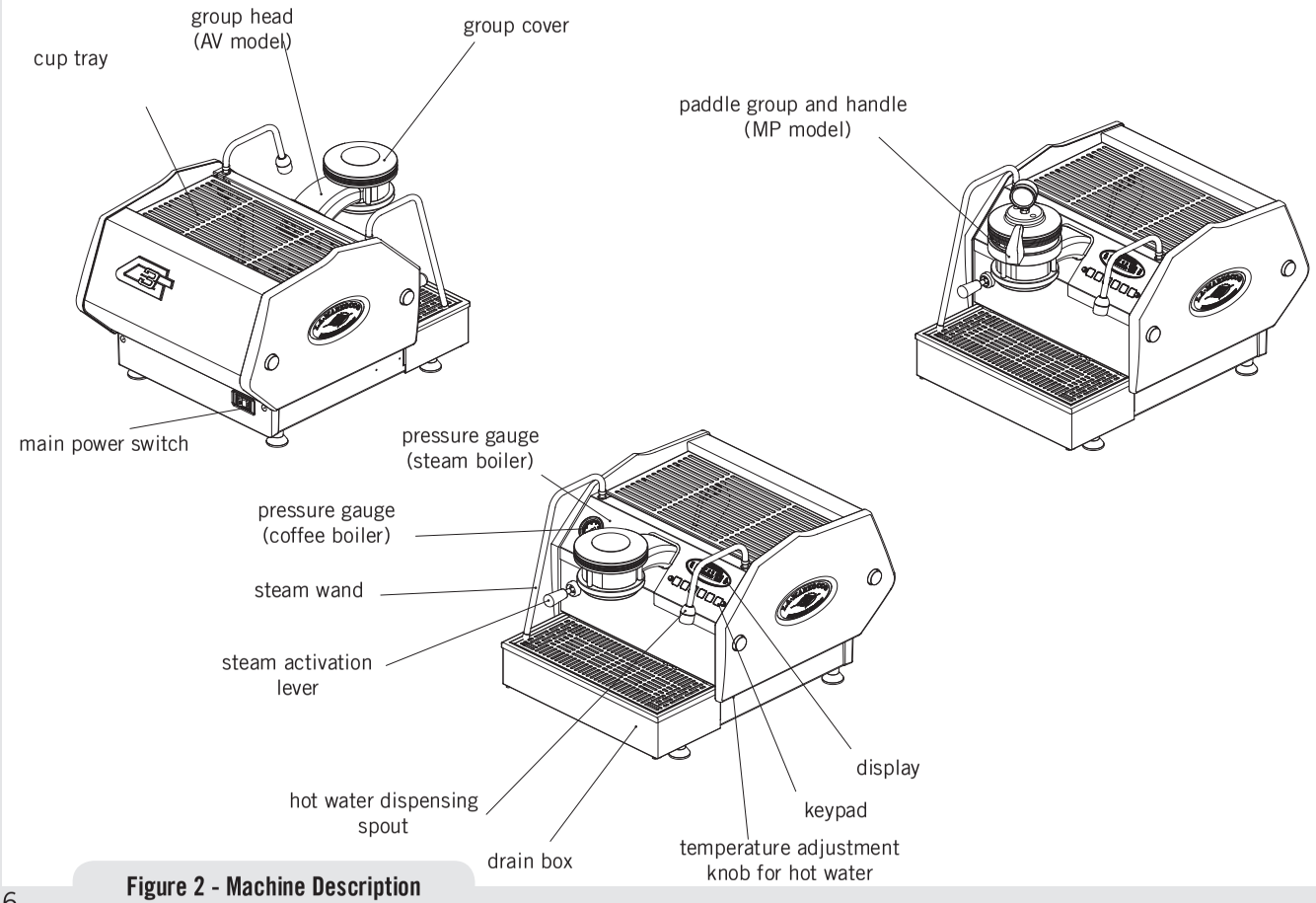

Figure 2 - Machine Description

WARNING

**THE MACHINE IS INTENDED TO BE PERMANENTLY CONNECTED TO MAINS POWER SUPPLY.
IT IS MANDATORY THAT A RESIDUAL CURRENT DEVICE (RCD) WITH A RATED RESIDUAL OPERATING CURRENT NOT EXCEEDING 30 mA IS INSTALLED.**

Espresso Machine Installation, GS/3

1) Fill Water reservoir with potable water. Remove the drain tray and slide the water reservoir until the water reservoir fill cover is accessible. Remove the cover and fill water reservoir with potable water. Replace the fill cover and slide the water reservoir to the operating position and replace the drain tray. (See GS/3 Software and Installation Guide for additional instructions). In order to connect the machine up to the water mains proceed according to the indications given in the Installation Guide and in compliance with any local/national safety standards of the location in which the machine is being installed.

To guarantee a correct and safe functioning of the machine and to maintain an adequate performance level and a high quality of the beverages being brewed it is important that the incoming water be of a hardness greater than 7°f (70ppm, 4°d) and less than 10°f (100ppm, 6°d), pH should be between 6.5 and 8.5 and the quantity of chlorides be less than 50mg/l . Respecting these values allows the machine to operate at maximum efficiency. If these parameters are not present, a specific filtration device should be installed, while always adhering to the local national standards in place regarding potable water.

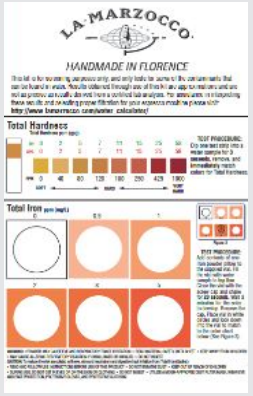

In order to enable you to check if your water supply is within the suggested ranges, La Marzocco machines will be equipped with two units of a quick water test kit (see image below) including 6 test-strips and instruction cards.

The parameters that you can measure are Total Hardness, Total Iron, Free Chlorine, Total Chlorine, pH & Total Alkalinity, Chlorides.

Ideally, you should perform a test on the water BEFORE the water treatment system and again AFTER the water system in order to verify if this is actually matching our suggested ranges.

Once the test has been performed, learn which treatment system is most appropriate for your particular water supply by filling out the online water calculator on our website: LA MARZOCCO WATER CALCULATOR (http://www.lamarzocco.com/water_calculator/).

WARNING

THE COFFEE MACHINE MUST BE PLACED IN A HORIZONTAL POSITION ON A COUNTER HIGHER THAN 80 CM FROM THE GROUND

2) Connect Espresso Machine to Power Supply.

Connect the espresso machine to a power supply that is rated in accordance with the serial plate on the espresso machine.

3) Filling the Boilers with Water.

Once the espresso machine has been unpackaged, placed on a hard surface, and with the water reservoir full, it will be necessary to fill the boilers with water. Complete the following steps to properly fill the boiler tanks:

Steam Boiler: Turn the main switch to position “1” or ON, the automatic steam boiler level system will be switched on, activating the auto-fill solenoid valve and the water pump. This will fill the steam

boiler to a predetermined level and will shut off when full.

NOTE: It may be necessary to re-fill the water reservoir during this process. Check to see if the "Water Tank Empty" error message is present on the display before continuing.

Coffee Boiler: The water flows inside the coffee boiler directly when the water pump is activated. When the GS/3 is turned on the electronics will activate the water pump to fill both boilers. Since the inflow of water will compress the air in the boiler it will be necessary to remove or "bleed" the air from the coffee boiler. All air must be removed in order to completely "saturate" the coffee boiler/group assembly. To remove the air from the boiler ("bleed the groups") remove the group cover from the top of the group head. Then loosen the bleed screw (see picture) to allow air to escape until water

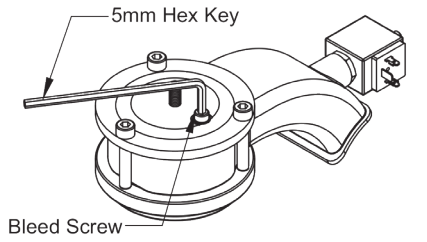

Figure 3a - "Bleed the Group AV"

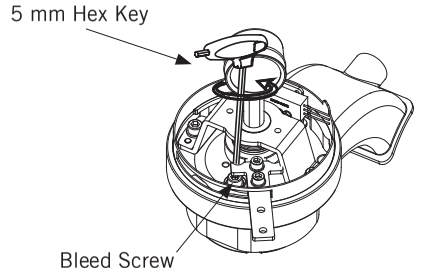

Figure 3b - "Bleed the Group MP"

flows from below the screw head. It may be necessary to activate the brew process by pressing button #5 (the continuous button) to force the air out of the group. Tighten the screw to stop the water from flowing. Over-tightening can cause damage to the sealing washer and the group cap. If this sealing washer is damaged replace washer with one included in accessory kit. Once all air is removed from the coffee boiler, reinstall the group cover. For more detailed instruction please refer the GS/3 Installation Guide.

NOTE: It may be necessary to re-fill the water reservoir during this process. Check to see if the "Water Tank Empty" error message is present on the display before continuing.

4) Verify filling of Boilers.

The installation is now complete and the espresso machine should be heating to the operating temperatures.

Brewing after first installation

Once the first installation procedures are finished, before proceeding with brewing coffee, hot water and steam, please follow these steps:

- Engage the portafilter by inserting it into the group head and rotate the handle from left to right. Once the portafilter is inserted properly, you can press one of the brewing buttons on the keypad to start the flow of water through the portafilter (AV models) or rotate the handle from left to right (MP models). Brew water through the group for at least two minutes.
- Being careful to avoid burns, turn on steam wand for at least one minute.
- Turn on the hot water valve for the time necessary to allow at least 1 liter of water to be brewed.

5) Waiting for the Espresso Machine to Heat to Operating Temperature. During this time, the pointer of the coffee boiler pressure gauge may reach as high as 12 bar. This may happen anytime that the heating element is in the "on" condition. If the pressure

exceeds 12 bar then it will
be necessary to adjust the expansion valve in such a manner that the pressure never exceed 12 bar.
In normal operating conditions, the coffee boiler pressure gauge can read anywhere from 0-12 bar. When brewing,
the pressure should be set to approximately 9 bar. When the espresso machine is ready to operate all lights on the keypads will light up.

Figure 4 - Key Pad buttons

Figure 5 - Key Pad buttons with lights on

NOTE: As the steam boiler reaches operating temperature you may hear air and steam escaping from the boiler. This is a normal sound. As the water boils, air in the boiler is replaced by steam and exits through the vacuum breaker. As the boiler get closer to operating temperature the vacuum breaker closes and the steam is no longer able to escape. This process allows the air in the steam boiler to escape and to be replaced by water vapor.

Water specifications table

		Min.	Max.
T.D.S.	ppm	90	150
Total Hardness	ppm	70	100
Total Iron (Fe^{+2}/Fe^{+3})	ppm	0	0,02
Free Chlorine (Cl_2)	ppm	0	0,05
Total Chlorine (Cl_2)	ppm	0	0,1
pH	value	6,5	8,5
Alkalinity	ppm	40	80
Chloride (Cl^-)	ppm	not more	50

N.B.: Test water quality (the warranty is void if water parameters are not within the range specified in the section “installation”)

6) Adjusting the Expansion Valve.

The expansion valve is a component that limits the maximum pressure in the coffee boiler. Heating the coffee boiler causes the water within to expand. Since the coffee boiler is completely saturated, the expanding water causes an increase in pressure within the boiler. Without a safety device the increase in pressure could cause a rupture in the boiler. The pressure in the coffee boiler should never exceed 12 bar. The valve is hot, so, using adequate protection, rotate the expansion valve clockwise to increase pressure. To decrease pressure rotate the expansion valve counter clockwise (See the following diagram).

⚠ WARNING ⚠

THE EXPANSION VALVE CAN DISCHARGE WATER AS HOT AS 200°F / 93°C. ADEQUATE PROTECTION FOR HANDLING THIS COMPONENT IS NEEDED BEFORE ATTEMPTING TO ADJUST.

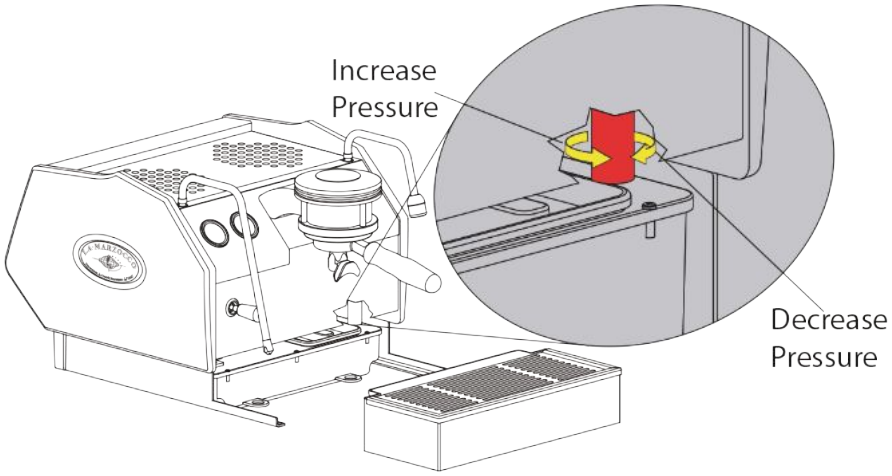

Figure 6 - Expansion Valve Adjustment

7) Adjusting Water Pump Pressure.
The water pump is factory set at 9 bar pressure. If it becomes necessary to change the pressure please use the following procedure:

1. Remove the left side cover assembly.
2. Locate the water pump adjustment screw and loosen the lock nut.
3. Adjust the water pump pressure to the desired measurement.
4. Rotate Clockwise to increase pressure and counter clockwise to reduce pressure.

NOTE: The water pump pressure should be adjusted when the machine is operating and coffee is present in the portafilter.

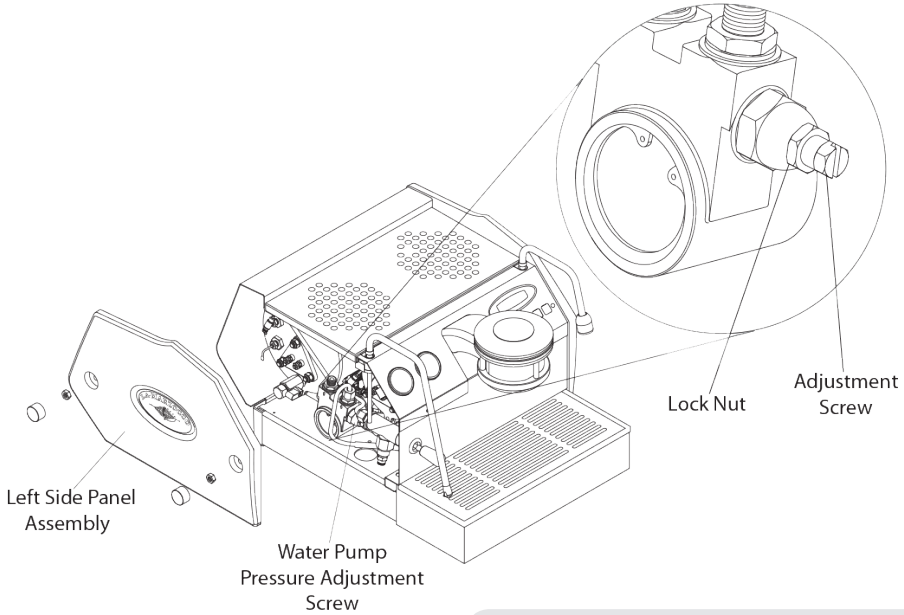

Figure 7 - Water Pump Pressure Adjustment

5. Operation

1. Installing the Portafilters.
Install the portafilter by inserting it into the group head and rotate the handle from left to right. Once the portafilter is inserted properly, you can press one of the brewing buttons on the keypad (AV model) or move the paddle handle from right to left (MP Model) to start the flow of water through the portafilter. Please refer to the Software Programming Manual for a description of the functions of the keypad. It is important that the portafilter is at operating temperature prior to filling with coffee. Allow hot water to pass through the empty portafilter for a few seconds before the brewing process to pre-heat the portafilter.

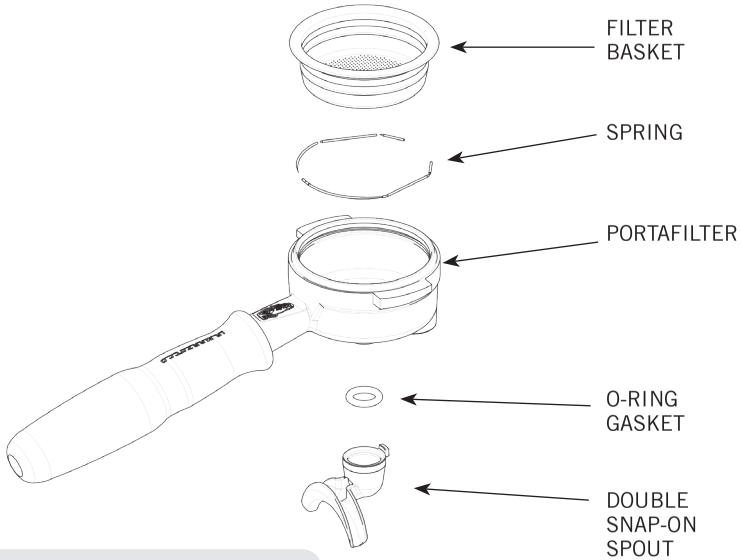

Figure 8 – Portafilter

Note: It is important to leave the portafilter installed in the espresso machine when not in use. The portafilter must remain heated for the brewing process to function correctly.

2. Brewing Coffee. It is now possible to remove the portafilter to make a coffee beverage. Place some ground coffee in the portafilter basket using the single or double basket. Press down on the ground coffee with the supplied tamper and install the portafilter on the GS/3. On AV model press a brew button to begin the brewing process, or move the paddle handle from right to left to begin brewing on MP model (see Fig.2).

NOTE: Some users believe it is important to allow water to pass through the the group head prior to installing the portafilter to flush any remaining coffee oils and particles from the group head. Some also flush just after brewing for the same reason. Please experiment to make the best possible procedure for your coffee. There are many techniques for brewing espresso. You can find instructions for many techniques on websites, blogs and forums. Some are even monitored by professional baristas around the world.

3. Dispensing Steam.
In order to allow for any condensed water in the wand to be released ALWAYS allow some steam to be discharged by turning on the valve before inserting the steam wand into the pitcher of liquid to be heated.
Dip the steam wand into the liquid to be heated. Depress the steam valve lever to activate the steaming process.
The steam valve has a variable flow control. The steam valve will lock in the fully on position only.
The steam will transfer heat to the liquid raising its temperature. Be careful not to allow liquid to overflow in order to avoid severe burns.
In order to prepare milk for making cappuccino with the right amount of foam, go through the following steps:
• After purging the steam wand place the container half-full of milk underneath, carefully open the steam valve and raise the container so as to bring the wand end to a point just below the surface of the milk; at this point, move the container up and down just enough to dip the nozzle end in and out of the milk until you get the right amount of foam, bring the temperature of the milk almost up to 149/158°F or 65/70°C. You can then pour this milk into a cup containing warm espresso and you will end up with a fresh cup of cappuccino.

NOTE: It is important to have a sufficient volume of liquid in the steaming pitcher. Therefore if you intend to steam small amounts of milk it is necessary to use a small pitcher. If you intend to steam larger quantities of milk then it is necessary to use a larger steaming pitcher.
Using too little milk in a steaming pitcher can allow the milk to be “blown out” of the pitcher. A good rule to follow is to fill the steaming pitcher only half full of liquid.

NOTE: In order to prevent the heated liquid from being sucked back into the steam boiler it is recommended that you purge the steam system after heating any liquid. Purge the system by opening the steam valve for a few seconds to allow steam to escape to the atmosphere from the end of the steam wand. Failure to do so can cause the heated liquid to transfer from the steaming pitcher to the steam boiler (via vacuum created from cooling parts). This condition is undesireable and can cause contamination in the steam boiler.

4. Dispensing Hot Water.
You may dispense hot water by using the hot water nozzle. To dispense hot water press the hot water button.

Figure 9 - Hot Water Button

This button commands the hot water delivery. The volume of water delivered may be adjusted via the display (see the Software Programming Manual for further instructions). The temperature of the water dispensed may be adjusted by adjusting the mixing valve under the right side cover of the espresso machine (see machine description diagram, Figure 2, and the instructions on the next page).

WARNING

THE COFFEE BOILER AND STEAM BOILER CONTAIN WATER AT ELEVATED TEMPERATU-RE. WATER TEMPERATURE OVER 125°F/52°C CAN CAUSE SEVERE BURNS INSTANTLY OR DEATH FROM SCALDING (COFFEE BOILER 200°F/93.3°C-STEAM BOILER 260°F /127°C)

WARNING

THIS MACHINE IS NOT SUITABLE FOR OUTDOOR USE. JETS OF WATER SHOULD NOT BE USED TO CLEAN THE MACHINE, NOR SHOULD IT BE PLACED WHERE WATER JETS ARE USED.

6. Key Features

1. Controlling the Brew Process Using Volumetric Programming.
This espresso machine allows the volumetric programming of each of the first 4 buttons on each group (numbered left to right). Please consult the Software Programming Manual for further instructions.

2. Hot Water Dispensing.
Hot water may be dispensed from the Hot Water Wand on the right side of the machine. This is accomplished by pressing the hot water button (Fig.9). The amount of water dispensed can be programmed via the digital display. Please consult Software Programming Manual for programming instructions. The temperature of the hot water may be adjusted slightly via the Hot Water Adjusting Knob. This adjusting knob is hidden under the right side panel assembly. The knob protrudes slightly form the bottom of the side panel. To find this knob, look at the bottom edge of the right side panel.
The knob may be turned by sliding a finger under the side panel from front to rear (to decrease temperature) or from rear to front (to increase temperature).

3. Quick Keys.
The GS/3 has 4 Quick Keys to allow the user to gain quick and easy access to important parameters that may be changed frequently. Please see the Software Programming Manual.

4. Water and Drain Connection Kit.
The GS/3 comes with a main water supply and waste drain connection kit. This kit allows the GS/3 to be connected to the main water supply and the main waste drain system. Instructions for installing this kit are contained in the GS/3 Installation Manual. The conversion kit contains the following items:

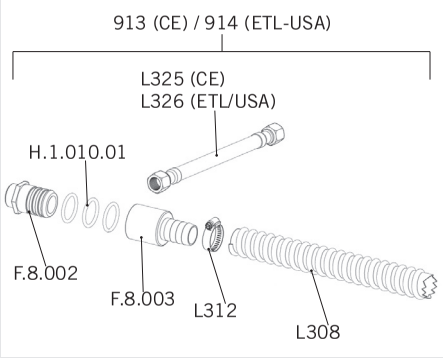

5. General Notes for Coffee Preparation. The portafilters must remain heated since they are at the lowest position of the group itself, and they are partially isolated from the same due to the rubber gasket between them. This can be accomplished by leaving the portafilters installed in the machine when not in use. The portafilters may also be actively heated by activating one of the brew buttons to flush hot water through the portafilter then turning off the water flow.

6. Coffee Grind.
The size of the coffee granules is extremely important in preparing a good cup of coffee, along with the type of coffee blend used. The ideal grind can be determined by making various coffees using the amount of ground coffee that you would normally use for each cup (we recommend at least 6g). The best grind is that which allows coffee to flow out from the portafilter spouts neither too slowly, drop by drop, nor too quickly. A general rule is that a double dose should dispense approximately 60mL / 2 fluid oz. of espresso in approximately 25 seconds. This time may be adjusted by varing the coarseness of the grind.

7. IMPORTANT To improve the flavor profile of the espresso, the temperature of the water in the coffee boiler, and therefore of the groups, may eventually be raised or lowered via the digital display (please consult Software Programming Manual for detailed instructions).

N.B.
If the machine has not been used for more than 8 hours or, in any case, after long periods of being idle, in order to use the machine to its full potential it is necessary to perform some cleaning cycles before brewing beverages as follows:
• Group: with the portafilter engaged in the group brew water through it for at least two minutes
• Being careful to avoid burns, turn on each steam wand for at least one minute.
• Turn on the hot water valve for the time necessary to allow 1 liter of water to be brewed.
• If using machine with water reservoir, change the water in the reservoir daily.

If the machine is not going to be used for long periods of time, it is advisable to follow these safety indications:
• Disconnect the machine from the water mains or interrupt the water connection via a mains tap.
• Disconnect the machine from the electrical mains.

WARNING
IF THE ABOVE-MENTIONED INSTRUCTIONS ARE NOT ADHERED TO THE MANUFACTURER CANNOT BE HELD RESPONSIBLE FOR DAMAGE TO PERSONS OR THINGS.

7. Preventative Maintenance and Cleaning

Cleaning (Daily)

1. Cleaning the Diffuser Screen.

During the discharge operation (subsequent to coffee brewing), small amounts of coffee grounds may slowly build-up on and obstruct, even partially, the diffuser screen. Turn off the machine and remove the diffuser screen by unscrewing the diffuser screw. Soak in detergent powder liquid following the instructions of detergent manufacturer. Rinse thoroughly with clean water. Install and run hot water through the group head several times with the screen installed.

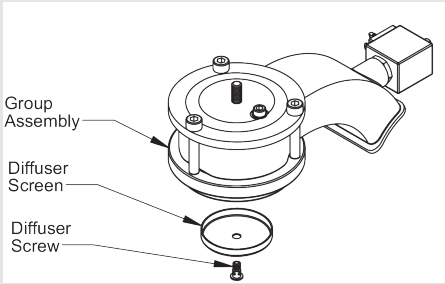

2. Cleaning the Brewing System.

Insert the blind filter into portafilter and put the correct amount of espresso cleaning product (following the product's instructions) into the filter, engage the portafilter into the group you want to clean.

• Press the brewing button for said group, as if you were making a regular cup of coffee. Stop the water after about 15-20 seconds.

• Start and stop the group several times until you notice clear water being released instead of soapy water when you remove the portafilter.

Do not remove the portafilter when group is actually brewing water.

CAUTION

DO NOT REMOVE THE FILTER HOLDER WHILE RELATIVE GROUP IS BREWING HOT LIQUIDS. THE COFFEE BOILER CONTAINS WATER AT ELEVATED TEMPERATURE. WATER TEMPERATURE OVER 125°F / 52°C CAN CAUSE SEVERE BURNS INSTANTLY OR DEATH FROM SCALDING.

• Rinse the group using a normal filter in the portafilter, by running hot water through it several times.

3. Cleaning Filter Baskets and Portafilters.

With daily cleaning of the stainless steel filters and portafilters it is sufficient to clean them with water and a cloth or appropriate brush. Otherwise, using an espresso cleaning product, following the product's instructions put the correct dose in about 1/2 a litre of water inside a heat-resistant container and heat.

• If using stainless steel portafilters with snap-on spouts remove the spout.Immerge filters and metallic parts of portafilters (not handles) in the hot solution and leave them submerged for about 30 minutes.

• Rinse thoroughly with clean water and run hot water through the group several times with the filter and portafilter engaged.

4. Cleaning the Drain Box.

Remove the drain box assembly and wash each of the components with hot soapy water. Rinse thoroughly and reinstall the drain box assembly. Hand wash each part with water containing mild soap.

CAUTION

THE MACHINE MUST NOT BE DIPPED IN, NOR SPLASHED WITH, WATER IN ORDER TO CLEAN IT. FOR CLEANING OPERATIONS, PLEASE FOLLOW THE INSTRUCTIONS VERY CAREFULLY.

5. Cleaning the Body.

Wipe the stainless steel surfaces with a soft, non abrasive cloth in the direction of the glazing marks, if any. Do not use any alcohol or solvents whatsoever on painted, imprinted, or plastic parts in order not to damage them. Clean the side panels using

a soft cloth. Do not spray the keypad or display with any liquid. Clean only with a damp soft cloth.

6. Cleaning the Hot Water and Steam Nozzles.
Steam nozzles must be cleaned immediately after use with a damp cloth and by producing a short burst of steam so as to prevent the formation of deposits inside the nozzles themselves, which may alter the flavor of other drinks to be heated. Hot water nozzles must be cleaned periodically with a damp cloth. If milk residue is present on the steam wand, soak the tip in a container of hot water, then it will be possible to wipe the tip clean. Repeat process if residue remains.
NOTE: This cleaning schedule is based upon a moderate to average use (20-300) cups per day. If machine use is less than moderate then this schedule may be adjusted accordingly.

Cleaning (Periodic)
1. Draining Boilers. Both the coffee boiler and the steam boiler may be drained and refilled to reduce the chance of mineral deposits build up on the inside walls of the inside surfaces. Additionally this draining process can be used to remove water that has a bad odor or taste.

Drain the Steam Boiler: Turn OFF the machine. Remove the left side panel assembly. Locate the ball valve on the bottom left side of the machine. Hold the ball valve with one tool and remove the brass cap on the end of the valve. Move the espresso machine close to a waste drain and tip machine at an angle to point the valve into the waste drain.

Drain the Coffee Boiler: Turn OFF the machine. Using adequate protection or an appropriate tool, loosen the expansion valve until water begins to flow freely. Then remove the group cap cover and loosen the bleed screw. When finished draining empty the drain box assembly.

Steam boiler draining: to activate this function you need to access the programming menu (see p. 50).

2. Clean the Water Reservoir.
The water reservoir needs to be cleaned periodically to ensure that no algae forms on the inside surfaces. To clean first remove the water reservoir form the machine. Disconnect the clear plastic water intake hose. Unscrew all screws from the cover to separate the parts. Wash all parts with warm soapy water. Hand wash each part with water containing mild soap.

WARNING
THE EXPANSION VALVE CAN DISCHARGE WATER AS HOT AS 200°F / 93°C. ADEQUATE PROTECTION FOR HANDLING THIS COMPONENT IS NEEDED BEFORE ATTEMPTING TO ADJUST.

Cleaning frequency

Daily
- Portafilter
- Filter
- Diffuser screen
- Diffuser screw
- Steam wand (just after use)
- Drain grille

Weekly
- Water Reservoir
- Drain Box

Monthly
- Cleaning the hot water nozzle

8. Mandatory Maintenance and Check-up Operations

These operations are in addition to the Maintenance and Periodic Cleaning Operations as specified in Chapter 7.

The following maintenance and check-up operations sould be carried out by a qualified technician.
The time required for the periodic maintenance is determinated by the quantity of daily work and/or coffee consumption.

N.B. These periodic maintenance operations are not covered by warranty.

EVERY THREE/FOUR MONTHS

- Replace group gaskets
- Replace diffuser screens
- Clean auto-fill probe
- Check vacuum breaker for proper operation
- Inspect water inlet valve
- Inspect drain system for leaks or clogs
- Check flow rate for each group
- Check brew temperature
- Check that brew pressure is at 9bar
- Check all switches for proper operation
- Check/note water hardness
- (Water quality must be within the range of parameters specified in the chapter on Installation, otherwise warranty is voided)
- Check filter basket condition

If AV Model:

- Check shot volumes
- Test flowmeter's ohm value (ohm value is acceptable if greater than 1.8 K ohm, and less than 2.2 K ohm

EVERY SIX/EIGHT MONTHS (in addition to the above)

- Rebuild steam assemblies

EVERY YEAR (in addition to the above)

- Replace portafilter baskets
- Inspect group valve plungers
- Inspect vacuum breaker
- Inspect steam boiler pressurestat
- Inspect expansion valve
- Inspect electrical wiring condition
- Inspect boilers safety switches
- Replace over-pressure valve (safety valve)
- Accurate control of the tightness at 2,4Nm of each cable on the terminal block.

If MP Model:

- Disassembly and lubrication of the components of the MP valve

EVERY 3 YEARS (in addition to the above)

- Check the condition of the inside of boilers and if necessary rinse out with a proper cleaning product allowed for food and beverage appliances.

gs3

Installation Guide

Chapters

1. Unpackage GS/3 Espresso Machine pag 20

2. Fill with water (Initial Fill) pag 20

3. Drain box alignment pag 21

4. Connect to power supply pag 21

5. Turn on main power pag 22

6. Turn on espresso machine pag 22

7. Remove group cover pag 23

8. Remove air from group head (bleeding the group) pag 23

9. Monitor coffee boiler pressure pag 24

10. Adjust the expansion valve pag 25

11. Monitor steam boiler pressure pag 26

12 . Brew espresso pag 27

13. Verify working boiler pressures pag 27

14. Connect to main water supply pag 28

Installation Guide

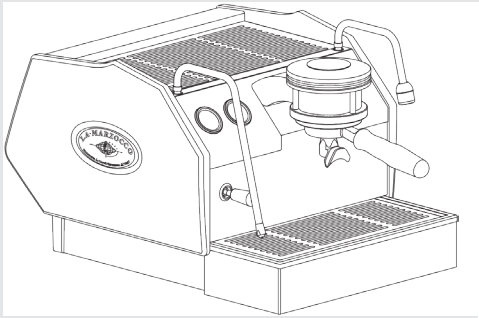

1 Unpackage espresso machine and set on a level surface. Ensure all accessories are included with shipment. See accessories list on page 4 of Owner's Manual. Check for any visable damage to espresso machine.

WARNING

THE COFFEE MACHINE MUST BE PLACED IN A HORIZONTALPOSITION ON A COUNTER HIGHER THAN 80 CM FROM THE GROUND

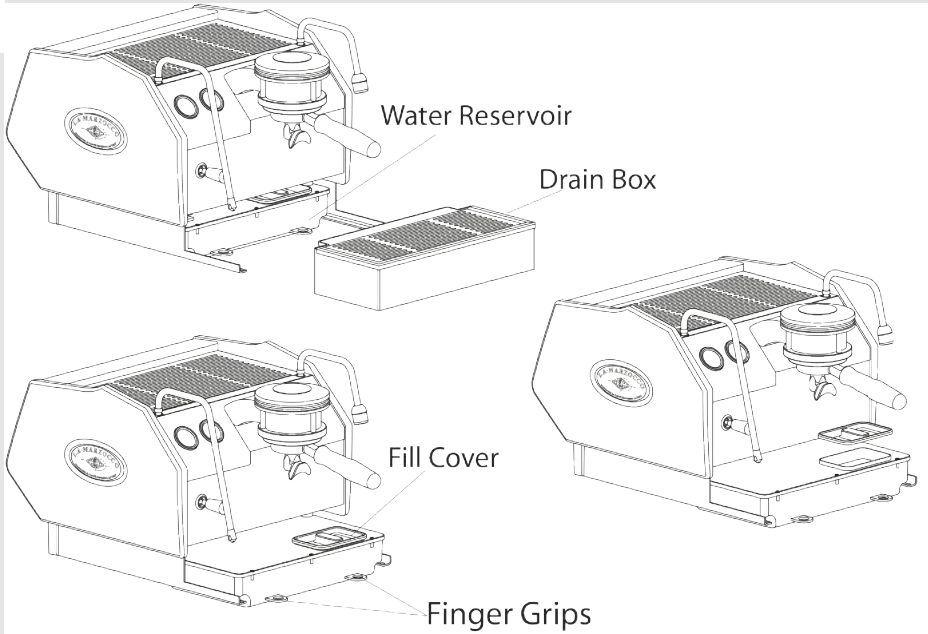

2 Remove/Open the fill cover and fill the reservoir with filtered water. Slide the reservoir back into position and replace the drain box. Make sure the drain box is inserted fully. The water reservoir must make contact with the level indicators on the rear side. Failure to make contact will result in the display message "Refill Tank". The message "Refill Tank" will be displayed anytime the reservoir does not have contact with the level indicators.

NOTE: The GS/3 is configured to work with the water reservoir. To connect the GS/3 to the mains water supply and the waste drain system, please refer to number 14 on page 24.

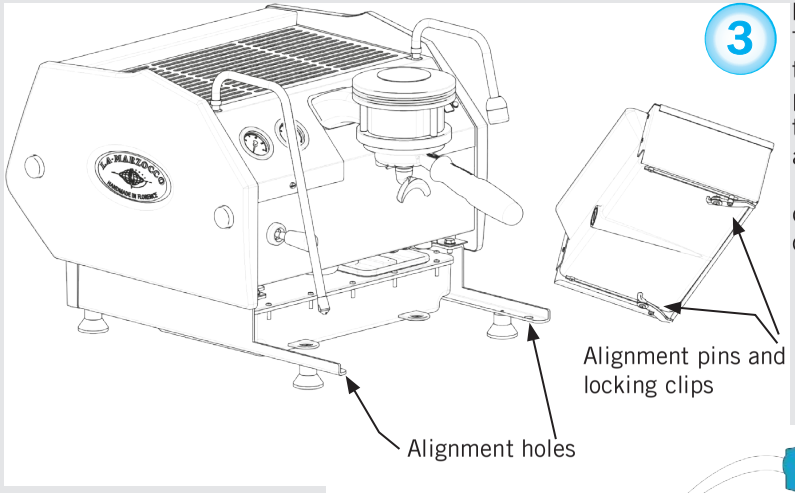

3

IMPORTANT NOTE:
The drain box must be installed correctly for the machine to function properly. The drain box has two alignment pins that mate with two alignment holes on the base of the GS/3. When installing the drain box, ensure that the alignment pins are inserted into the alignment holes. It may be necessary to push slightly on the front of the drain box to achieve proper alignment. Open the two clips outwards to lock drain box into place.

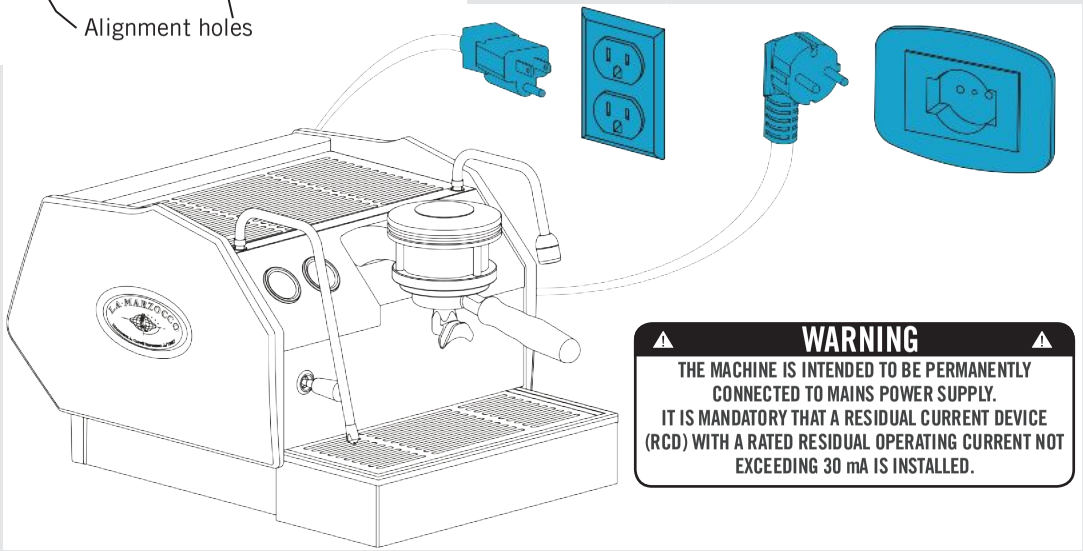

4 Connect the power cord to power supply capable of supplying: 230 VAC and 10 amps (for the 230 V version) or 120VAC and 15 Amps (for the 110 V version).

WARNING

THE MACHINE IS INTENDED TO BE PERMANENTLY CONNECTED TO MAINS POWER SUPPLY.
IT IS MANDATORY THAT A RESIDUAL CURRENT DEVICE (RCD) WITH A RATED RESIDUAL OPERATING CURRENT NOT EXCEEDING 30 mA IS INSTALLED.

WARNING

THE MANUFACTURER DECLINES ANY RESPONSIBILITY FOR ANY EVENT LEADING TO LIABILITY SUITS WHENEVER GROUNDING HAS NOT BEEN COMPLETED ACCORDING TO CURRENT LOCAL, NATIONAL, AND INTERNATIONAL REGULATIONS AND ELECTRICAL CODES, OR IF OTHER ELECTRICAL PARTS HAVE BEEN CONNECTED IMPROPERLY.

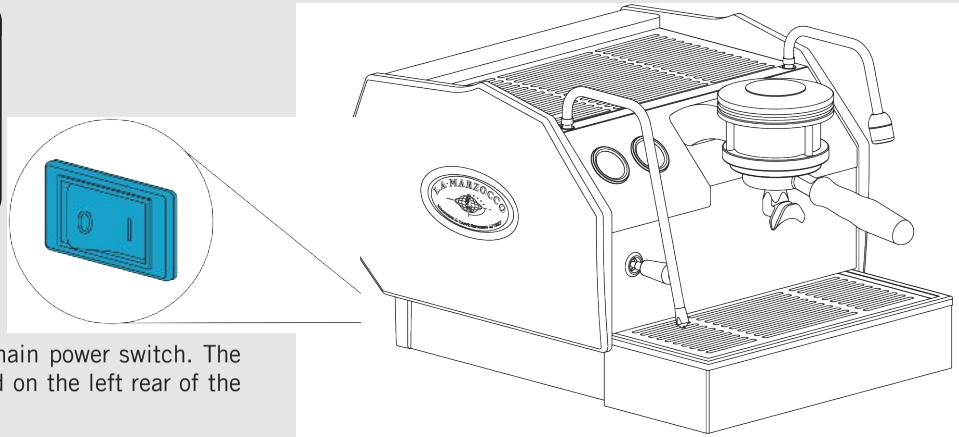

5 Turn on power by pressing the main power switch. The main power switch may be found on the left rear of the machine.

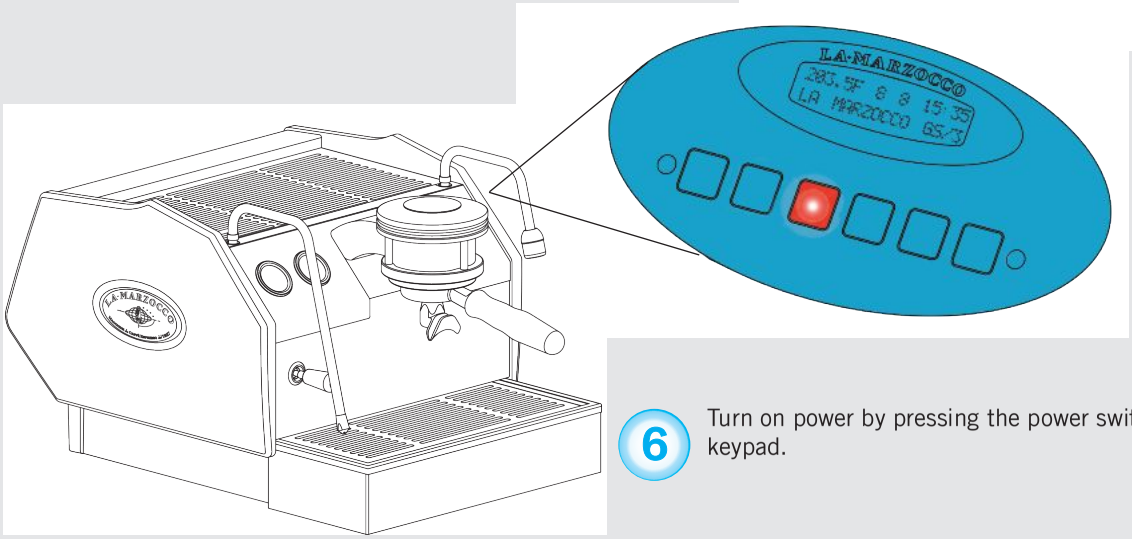

6 Turn on power by pressing the power switch, the 3th button on the keypad.

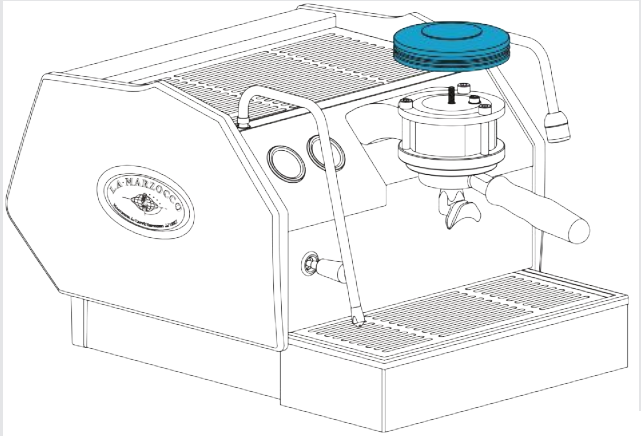

7 Press the “continuous” button to allow water to enter into the coffee boiler and wait for the brewing phase to end. Repeat twice. Now it is necessary to remove all of the air in the coffee boiler to saturate the group. This is commonly referred to as bleeding the group. To do this, remove the group cover by rotating the cover counter clockwise (AV models) or remove the pressure gauge, remove the paddle knob, remove the cover, replace the pressure gauge and rotate the lever to the left (MP models).

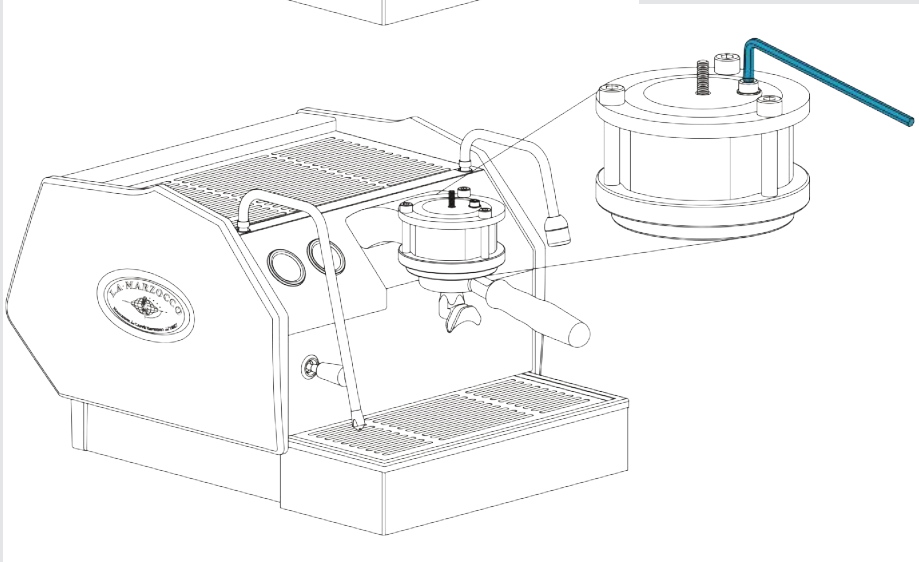

8 Unscrew the bleed screw (approximately 1/2 turn) to release all air from the coffee boiler (using the included 5mm hex key wrench). When water leaks from under the screw head, tighten the screw. Note: It might be necessary to activate the brewing process to force water into the boiler. To do this, press the continuous key until water leaks from under the screw head. Then tighten screw. Replace group cover removed in previous step. The steam boiler will begin to fill automatically and the reservoir will need to be refilled. Once boiler is full, heating phase will begin and the expansion valve will need to be adjusted immediately (see next step).

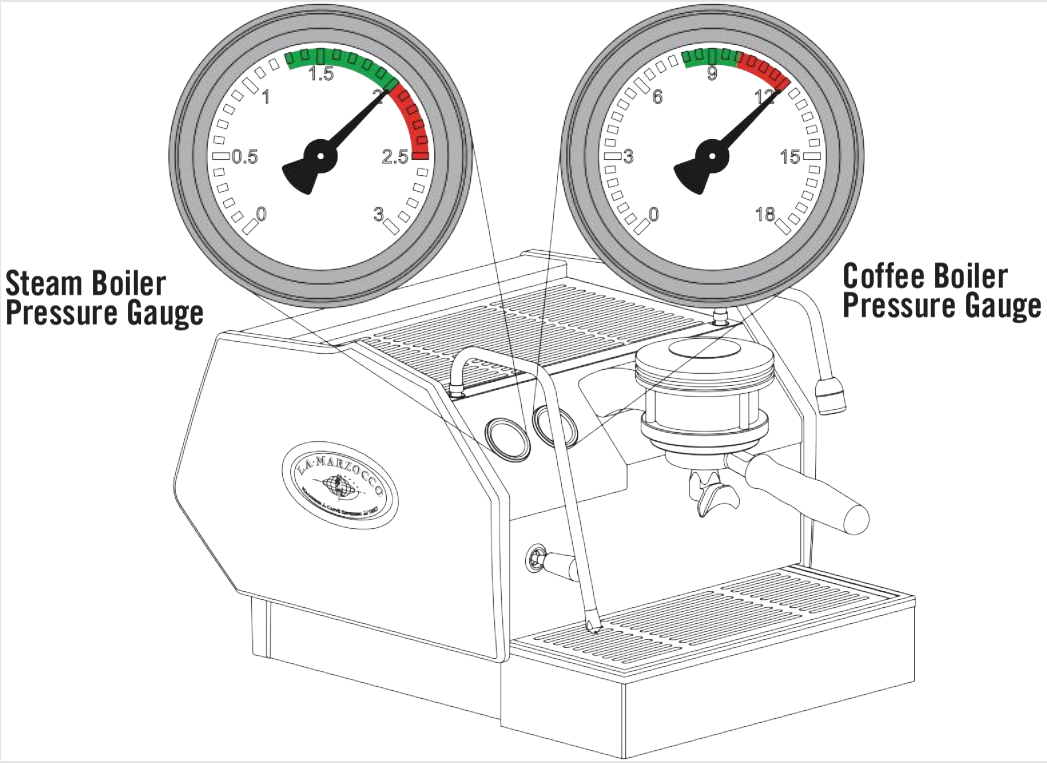

9 Next it will be necessary to check the expansion valve. As the coffee boiler heats to operating temperature the pressure in the coffee boiler will rise. There is an expansion valve behind the drain tray that allows some water to escape during this process to limit the maximum pressure in the coffee boiler to 12 bar. Please monitor the coffee boiler pressure gauge during the initial heating process. You should notice the gauge approach 12 bar and stop. If the pressure gauge does not reach 12 bar or if the pressure gauge rises above 12 bar, then it will be necessary to adjust the expansion valve. Please follow the next step to properly adjust the expansion valve.

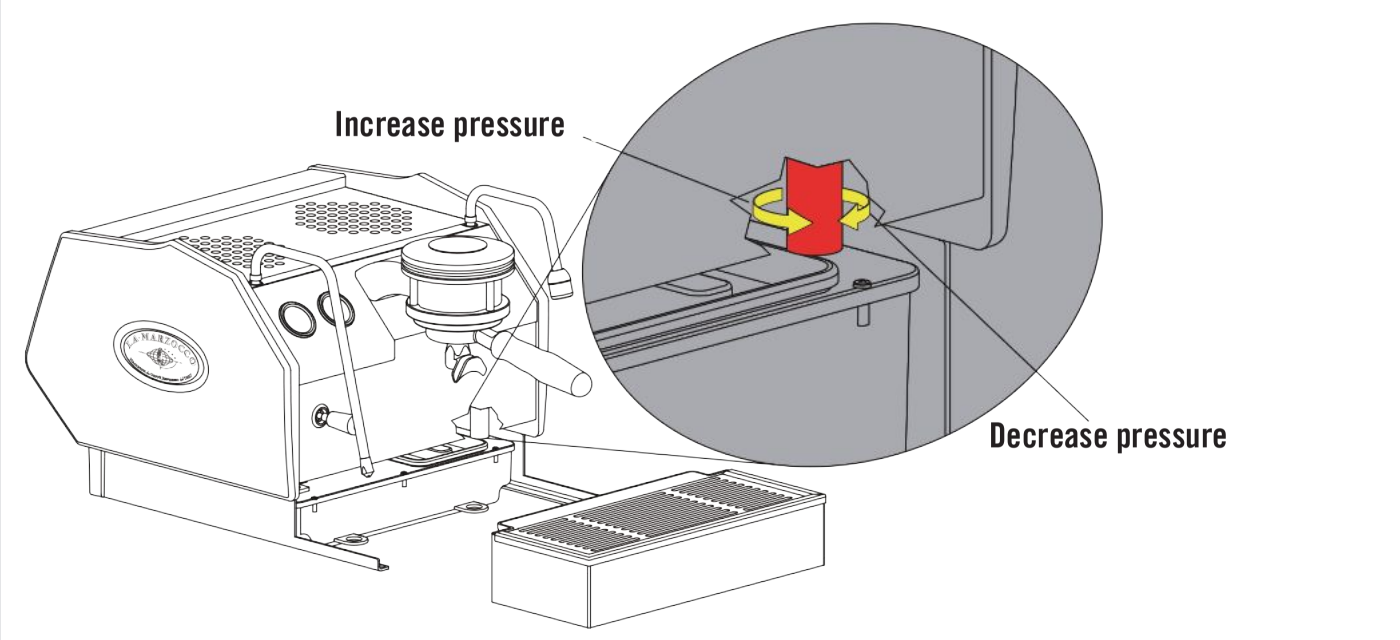

10 Please follow this procedure if it is necessary to adust the expansion valve. First remove the drain box to access the expansion valve. The expansion valve protrudes through the sheet metal, has the shape of a cylinder, is brass in color and approximately 25mm in diameter. The valve will be hot, so, using adequate protection, in order to adjust the expansion valve rotate the valve clockwise to raise the pressure and counter clockwise to reduce the pressure. It may be necessary to use a tool such as a pair of pliers to rotate the expansion valve in 1/4 turn or less increments until the desired pressure is achieved. Replace the drain box after each adjustment to ensure the machine is operating correctly.

WARNING

THE EXPANSION VALVE CAN DISCHARGE WATER AS HOT AS 200°F / 93°C. ADEQUATE PROTECTION FOR HANDLING THIS COMPONENT IS NEEDED BEFORE ATTEMPTING TO ADJUST.

11 You may also monitor the steam boiler heating progress by watching the Steam Boiler Pressure Gauge. The steam boiler is set at approximately 2.0 Bar of pressure at the factory.
Once the pressure gage reaches this point the heating will stop. When the coffee boiler reaches operating temperature all lights on the keypad will light. Should you wish to adjust the pressure of the steam boiler please refer to the Software Programming Guide under the section “Steam Boiler temperature”.

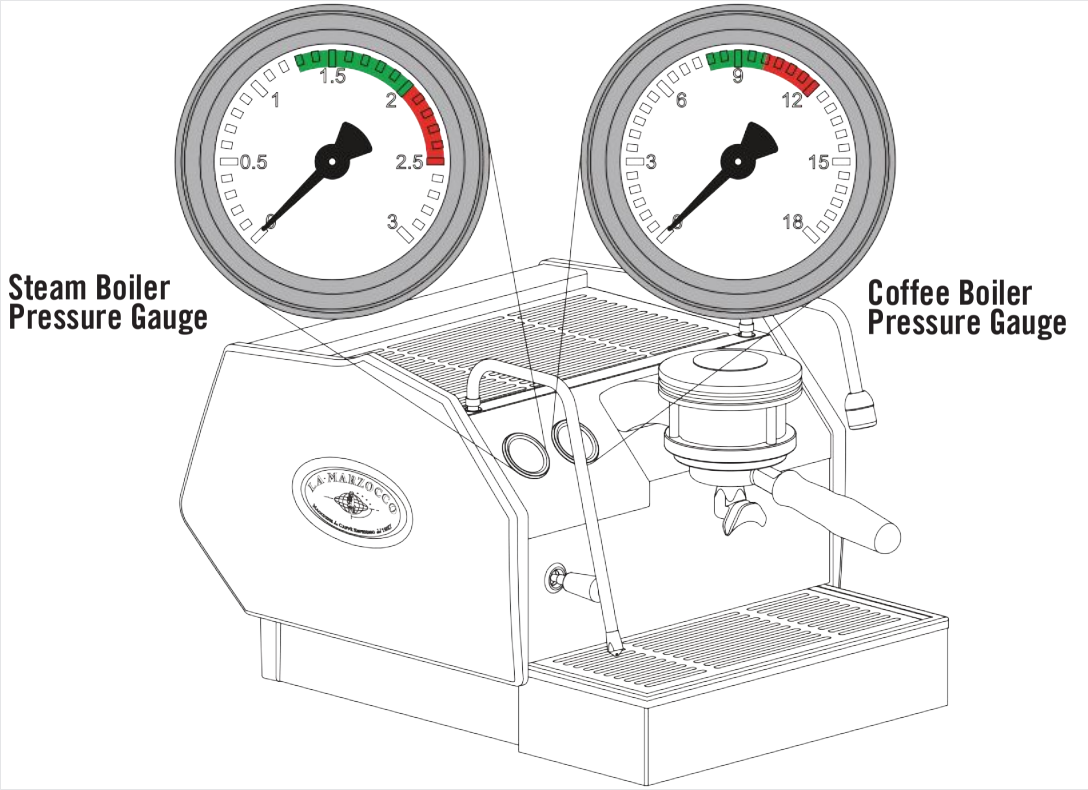

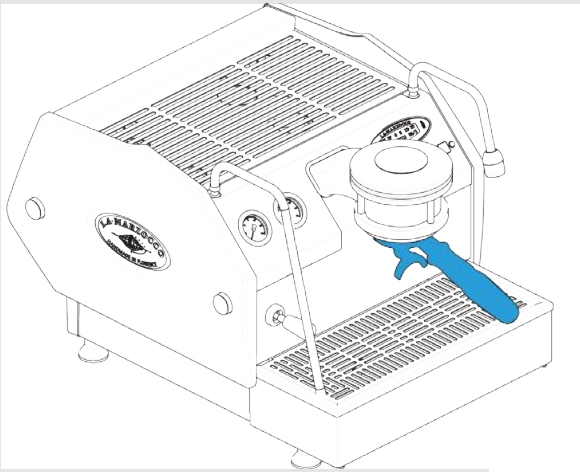

12 When the espresso machine is ready, place ground coffee into the portafilter and activate the brewing process. For additional information to operate this espresso machine please refer the the Owner's Manual or the Software Programming Guide.

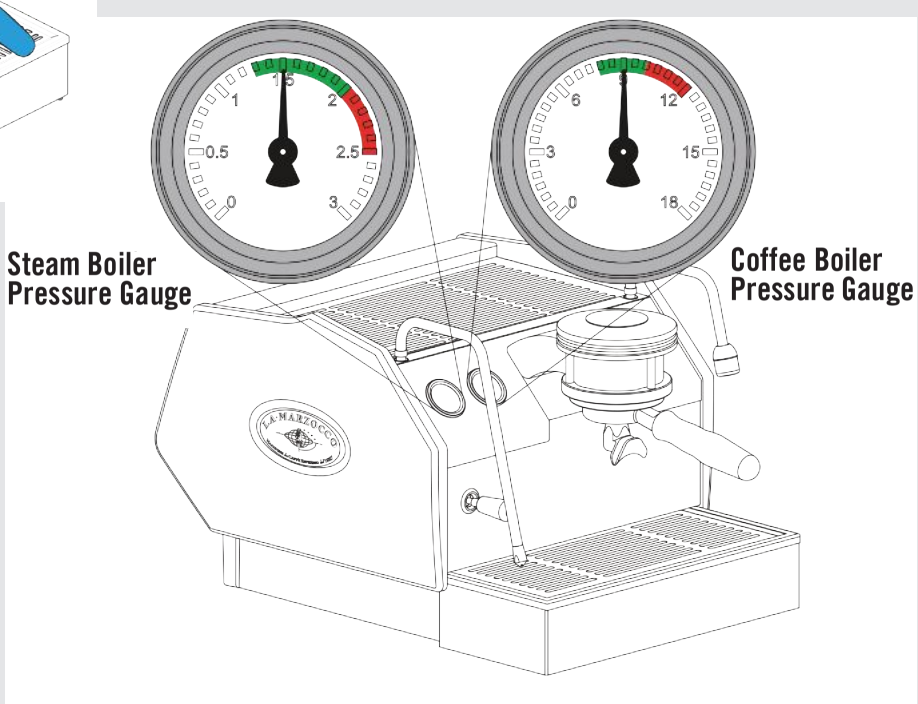

13 When brewing, the coffee boiler pressure should be between 8-10 bar. The steam boiler pressure should be set at 2 bar but can operate at any setting between 1.3 bar and 2 bar.

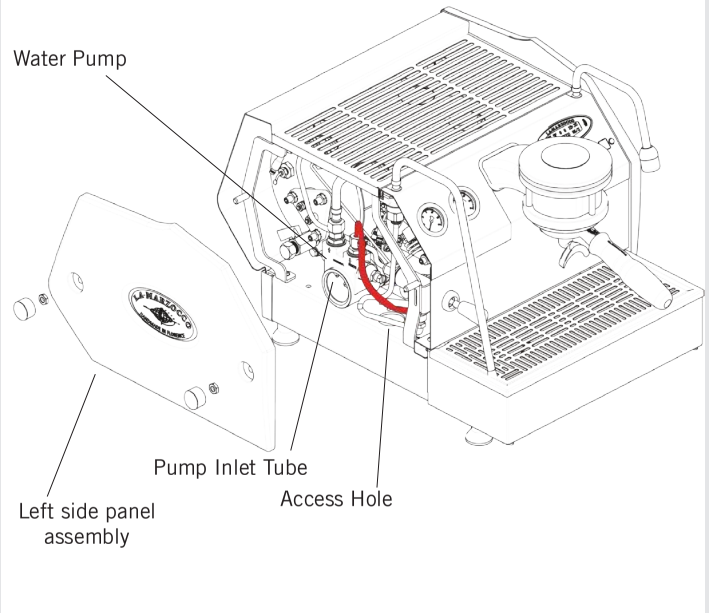

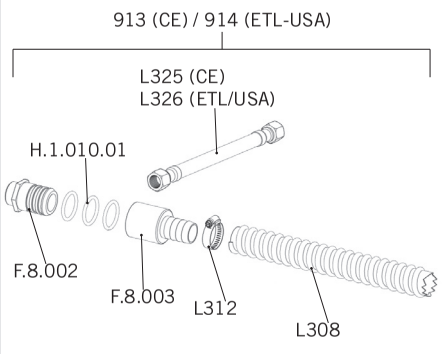

WARNING

WHEN THE MACHINE IS PLUMBED-IN TO WATER MAINS, ENSURE AT EACH INSTALLATION A NEW SET OF TUBES FOR PLUMBING AND RELATED GASKETS IS USED.

14

1. Please follow this procedure to connect the GS/3 to the mains water supply and the waste water drain system:
2. Turn off the machine and remove the plug from the socket.
3. Remove the drain box, slide out the water reservoir from the machine base.
4. Remove the left side panel assembly. Disconnect the hose from the top of the reservoir and remove the water reservoir.
5. Remove the drain box cap.
6. Remove the drain box cap and insert the drain box hose barb fitting (F.8.002) Do not over-tighten this part. Over-tightening will damage the drain box.
7. Connect the clear armoured drain hose to the hose barb fitting and to the waste drain using the supplied hose clamp.
8. Tighten the supplied hose clamp.
9. Connect the stainless steel braided hose (L325 or L326) to the water pump and pass through the access hole on the base under the pump. This hose will connect the pump to the mains water supply.
10. Replace the drain box on the machine base.
11. Reconnect the power plug to the power outlet. Turn on the water supply and the main power switch, check for leaks.
12. Configure the “Water Tank” parameter in the software to “not present” (see the Software Programming Guide for directions).
13. Turn on the machine.

(These instructions are also available on the website. http://techcenter.lamarzocco.com.)

gs3

Software Programming Guide

Programming Introduction

Digital Display pag 30
Programming Keypads pag 31
Accessing Programming Mode pag 32
Start Up Procedures pag 34
Shut Down Procedures pag 35
Quick Access Programming (Quick Keys) pag 36

“Machine OFF” Programming

Language pag 37
Name pag 38
Heating (Power Mode) pag 39
Water Reservoir (Tank) pag 40
Tea Water pag 41
Steam Boiler Probe Sensitivity pag 42
Service Cycles pag 43
Temperature Measurement Units pag 44
Proportional, Integral, Derivitive Settings pag 45
PID Setting pag 46
Coffee Boiler Temperature Offset pag 47
Water Filter Alarm pag 48
Open Valve (modello AV) pag 49
Drain Steam Boiler pag 50
Safety Valve pag 51
First Installation pag 52

“Machine ON” Programming

Water Volume Programming (AV models) pag 53
Clock Adjust pag 54
Auto ON/OFF pag 55
Coffee Boiler Temperature pag 56
Steam Boiler Temperature pag 57
Pre-Infusion or Pre-Brewing (AV models) pag 58
Service Phone pag 59
Crono Function pag 60

Troubleshooting pag 61

Programming Introduction

Description

• This espresso machine has a CPU and many configurable settings.

• Additionally, there are many feedback controls employed in this espresso machine to troubleshoot problems should they occur.

• The following is a brief introduction to the controls and display and how they interact with the operator.

Digital Display

The digital display is a backlit display capable of displaying 2 lines of 16 characters. The display enables the operator to interact with the espresso machine to visibly change parameter values. The display also provides valuable information to the operator.
There are several warnings that the can be displayed to alert the operator of an unusual condition or a fault. Additionally, simple messages are displayed alerting the operator that an action has been started or that a process needs to begin.

Programming Keypad (from s/n 0001 to 5378)

The keypad has two functions. The first is for control of the espresso. The second is for programming individual software parameters.

The button and the button are used to change the values of the individual parameters. The label for these buttons are “Espresso” and “2 Espressos” respectively.

The button is used to access certain parameters and for advancing the cursor within a parameter. The label for this button is “Coffee”.

The button is currently not used in programming mode. The label for this button is “2 Coffees”.

The button is used to access the programming mode. This button is also used as a function key and to scroll through parameters. The label for this button is “Continuous”.

The button is used to turn on and turn off the espresso machine and to activate the dispensing of the Hot Water.

MP (PADDLE) Programming Keypad (from s/n 0001 to 5418)

This keypad has the same functions as the above keys according to the identical symbols in bottom left corner.

Programming Keypad (only from s/n 5379)

The keypad has two functions. The first is for control of the espresso. The second is for programming individual software parameters.

The button and the button are used to change the values of the individual parameters. The label for these buttons are “Espresso” and “2 Espressos” respectively.

The button is used to access certain parameters and for advancing the cursor within a parameter. The label for this button is “Coffee”.

The button is currently not used in programming mode. The label for this button is “2 Coffees”.

The button is used to access the programming mode. This button is also used as a function key and to scroll through parameters. The label for this button is “Continuous”.

The button is used to turn on and turn off the espresso machine and to activate the dispensing of the Hot Water.

MP (PADDLE) Programming Keypad (only from s/n 5419)

This keypad has the same functions as the above keys according to the identical symbols in bottom left corner.

Programming Mode

Description

- To change the values of any parameter the operator must first enter into the programming mode.
- There are two levels within the programming mode that allow the programming of specific parameters.
- The two programming levels are as follows
- Machine "On" - The parameters contained within this level are ones the operator can change to affect the quality of the espresso.
- Machine "Off" - The parameters contained within this level are ones the operator can change to affect the performance of the espresso machine. These parameters are set at the factory and there is no need for adjustment. La Marzocco reccomends that no changes are made at this level.

Display	Operating Procedure
	Machine On Programming Level
200.5ºF 09:30 La Marzocco T:00	**1** While the espresso machine is on, press and hold the button FN. After approximately 5 seconds the following display appears.
Doses Setting Select within 50s	**2** This is the "Machine On" programming level. To program the dispense volume for each button see "Water Volume Programming". To access the "Machine On" programming mode press the button .
	Note: You must scroll, using the FN button, to the end to exit programming mode.
	Machine Off Programming Level
OFF 09:30	**1** While the espresso machine is off, press and hold the button FN. After approximately 10 seconds the following display appears.
Language ENGLISH	**2** This is the "Machine Off" programming level. Press the button FN to scroll through the available parameters. Note: You must scroll to the end to exit programming mode.

Turning the Espresso Machine On

Description

The following is the procedure for turning on the power to the espresso machine.

- Please follow the procedures carefully to avoid any damage to the espresso machine.
- Continue with the water reservoir full or a mains water connection.

Display	Operating Procedure
	1 Turn the Main Switch to the On position.
3D5 DE LUXE MAR OFF 09:30	**2** The message at left will be displayed briefly. This message indicates the revision level of the software installed in this espresso machine. Then the following message is displayed.
170.5oF 06:30 La Marzocco T:00	**3** To complete the turn on process, press the button and the display at left is shown. The machine begins to automatically fill the steam boiler until full. When the espresso machine reaches operating temperature, all keypad lights will light indicating that the espresso machine is ready to use. **NOTE:** Ensure all air is removed from the group prior to staring the espresso machine. This only needs to be completed once during the initial setup or when water is drained from the coffee boiler. Instructions for bleeding the groups of air can be found in the Installation Guide.

WARNING

HAZARDOUS VOLTAGE DISCONNECT FROM POWER SUPPLY BEFORE SERVICING

Turning the Espresso Machine Off

Description

The following is the procedure for turning off power to the espresso machine.

• Please follow the procedures carefully to avoid any damage to the espresso machine.

• This machine has two off settings. One setting turns off all of the components in the espresso machine and the other turns off power to the complete espresso machine.

Display	Operating Procedure
	1 The following is the procedure for safely turning off the espresso machine.
170. 5°F 06: 30 La Marzocco T: 00	**2** Press and hold the button FN then press the button . The display changes to the following:
OFF 09: 30	**3** This is the OFF setting used in the normal operating conditions.
	4 During servicing or other conditions that warrant it, the main switch should be turned to the OFF position. The espresso machine is off and display should be blank. It is important to follow this procedure when turning off the machine. Failure to do so can damage the electronics.

WARNING

HAZARDOUS VOLTAGE DISCONNECT FROM POWER SUPPLY BEFORE SERVICING

Quick Access Programming (Quick Keys)

Quick Keys

Description

- For convenience, there is access to five parameters of the software without entering program mode.
- These parameters are accessed through the use of “Quick Keys”.
- To use the Quick Keys, press and hold the function button and then the quick key is accessed.
- In the current version of the software (ver 1.15) the following quick keys are available:

Quick Key Number	Function
1	Group rinse cycle
2	Coffee Boiler Temperature
3	Steam Boiler Temperature
4	Pre-Brewing enable/disable
6	Machine Off function

Display	Operating Procedure
Rinsing in progress	**1** **Quick Key 1** Press and hold the button FN, then press the button.
T. Coffee Boiler 200.5 oF	**2** **Quick Key 2** Press and hold the button FN, then press the button.
T. Steam Boiler 260.0 oF	**3** **Quick Key 3** Press and hold the button FN, then press the button.
Pre Brewing Enabled	**4** **Quick Key 4** Press and hold the button FN, then press the button.
OFF 15:45	**5** **Quick Key 6** Press and hold the button FN, then press the button.
	NOTE: Quick Keys only function when the espresso machine is on and not brewing coffee/hot water.
	N.B. MP (PADDLE) MODEL Quick Key no. 1 and no. 4 do not function because the control of the group is manual.

EN

Language

Description

- This parameter allows the operator to change the language of the display.

Display	Operating Procedure
OFF 09:30	**1** Enter into “Machine Off” programming mode.
Language ENGLISH	**2** Press the button or the button to change the language.
Temperature °F	**3** When finished, press the button FN to continue to the next parameter.

“Machine OFF” Programming

Name

Description

- This parameter allows the technician to program a 16 character user name.
- The user name is displayed continuously on the display on the second line.
- The user name is not displayed when the Crono Function is ENABLED.

Display	Operating Procedure
OFF 09:30	**1** Enter into “Machine Off” programming mode.
Language ENGLI SH	**2** Scroll through the displayed parameters using the button until the following display appears:
Name	**3** Press the button or the button to change the value of the flashing parameter.
Name XXXXXXXXXX	**4** Press the button to advance to the next character. Repeat step 3-4 to program remaining characters
	5 When finished, press the button to continue to the next parameter.

EN

Heating (Power Mode)

Description

- This espresso is equipped with a power saving feature that allows the espresso machine to operate at lower power if needed.
- While in power saving mode you may experience slightly longer steam recovery time. The steam boiler pressure/temperature may be adjusted to compensate for this if needed.
- There are two options in Power saving mode:
- Full - This mode gives full power to both the coffee boiler and the steam boiler. On 120V model, in full power mode, a 20 Amp circuit is required.
- Half - In this mode the power is alternated between the coffee boiler and the steam boiler (with priority given to the coffee boiler).

Display	Operating Procedure
OFF 09:30	**1** Enter into “Machine Off” programming mode.
Language ENGLI SH	**2** Scroll through the displayed parameters using the button FN until the following display appears:
Heat i ng Hal f	**3** Press the button – or the button + to change the value between Half and Full.
	4 When finished, press the button FN to continue to the next parameter.

Water Reservoir (Tank)

Description

- This parameter allows the user to choose the use of a water reservoir. If the espresso machine is connected directly to the water supply, then this value should be set to “not present”.This must be done before the machine is plumbed.

Display	Operating Procedure
OFF 09:30	**1** Enter into “Machine Off” programming mode.
Language ENGLISH	**2** Scroll through the displayed parameters using the button FN until the following display appears:
Tank Present	**3** Press the button – or the button + to change the value between PRESENT and NOT PRESENT.
	4 When finished, press the button FN to continue to the next parameter.

Tea Water

Description

- This parameter allows the technician to select the activation of the water pump during hot water dispensing.
- When hot water is drawn from only the steam boiler this parameter should be set to “without pump”.
- If you wish to adjust temperature of water using the Hot Water Adjusting Knob, set this parameter to “with pump”, see page 11 for more details.

Display	Operating Procedure
OFF 09:30	**1** Enter into “Machine Off” programming mode.
Language ENGLISH	**2** Scroll through the displayed parameters using the button FN until the following display appears:
Tea Water with Pump	**3** Press the button – or the button + to change to either WITH PUMP or WITHOUT PUMP.
	4 When finished, press the button FN to continue to the next parameter.

Steam Boiler Probe Sensitivity

Description

- This parameter allow the user to set the probe sensitivity depending of the hardness of the water. The harder the water, the lower the sensibility of the probe.

Display	Operating Procedure
OFF 09:30	**1** Enter into “Machine Off” programming mode.
Language ENGLISH	**2** Scroll through the displayed parameters using the button FN until the following display appears:
ProbeSensitivity Low	**3** Press the button – or the button + to change the value between LOW, MID and HIGH.
	4 When finished, press the button FN to continue to the next parameter.

EN

Service Cycles

Description

- This parameter allows the user to program a threshold number of cycles (in multiples of 1000) when the machine prompts for service.
- When Prompted for Service, the “Service Phone” number will be displayed.

Display	Operating Procedure
OFF 09:30	**1** Enter into “Machine Off” programming mode.
Language ENGLISH	**2** Scroll through the displayed parameters using the button FN until the following display appears:
Service Cycles 0	**3** Press the button – or the button + to change the value (range =99000).
	4 When finished, press the button FN to continue to the next parameter.
	N.B. : To reset this parameter once “Service Phone” number is displayed. Turn off machine with on/off switch behind machine. Press and hold – and + buttons. Turn on machine holding the two buttons until “Service Reset” appears on display.

Temperature Measurement Units

Description

- This parameter is set at the factory at the request of the local distributor.
- This parameter has two options Celsius (°C) or Fahrenheit (°F).

Display	Operating Procedure
OFF 09:30	**1** Enter into “Machine Off” programming mode.
Language ENGLISH	**2** Scroll through the displayed parameters using the button FN until the following display appears:
Temperature °F	**3** Press the button – or the button + to change the value to either Celsius (°C) or Fahrenheit (°F).
	4 When finished, press the button FN to continue to the next parameter.

Proportional, Integral, Derivitive (PID) Settings (Coffee Boiler)

Description

- This parameter is preset at the factory based upon theoretical calculations and physical experiments.
- It is not recommended that these numbers are changed.
- Changes to these parameters can cause unexpected results.
- Qualified technicians may wish to experiment with different values.
- If you do wish to change the values and find that unexpected results occur, return to the factory default values:

kP	kI	kD
8.0	0.15	10.0

Display	Operating Procedure
OFF 09:30	**1** Enter into “Machine Off” programming mode.
Language ENGLI SH	**2** Scroll through the displayed parameters using the button FN until the following display appears:
C kP kI kD 8.0 0.15 10.0	**3** Press the button – or the button + to change the value of the flasing parameter.
	4 When finished, press the button FN to continue to the next parameter.

PID Setting

Description

- This parameter sets a range in which the PID algorithm is active.
- This parameter is preset at the factory based upon theoretical calculations and physical experiments.
- It is not recommended that this number is changed. Changes to this parameter can cause unexpected results.
- It is important to write down the number before any changes are made to make sure you can return to the factory programming if unexpected results occur.
- Experienced technicians may wish to experiment with different values.
- The lowest value for this parameter is 3.6°F / 2.0°C

Display	Operating Procedure
OFF 09:30	**1** Enter into “Machine Off” programming mode.
Language ENGLI SH	**2** Scroll through the displayed parameters using the button FN until the following display appears:
PI D Setting 20.1 °F	**3** Press the button – or the button + to change the value of the parameter.
	4 When finished, press the button FN to continue to the next parameter.

EN

Coffee Boiler Temperature Offset

Description

- This parameter isused to calibrate the coffee boiler temperature system to ensure the display temperature accurately represents the temperature of the water exiting the group head.
- This parameter is preset at the factory based upon initial tests of this espresso machine.
- It is not recommended that this number is changed. Changes to this parameter can cause unexpected results.
- It is important to write down this value before making changes to be sure you can return to the factory programming if unexpected results occur. Each machine may have a different value as it is set individually.

Display	Operating Procedure
OFF 09:30	**1** Enter into “Machine Off” programming mode.
Language ENGLI SH	**2** Scroll through the displayed parameters using the button FN until the following display appears:
Coffee T. Offset 1.5 °F	**3** Press the button – or the button + to change the value of the flasing parameter.
	4 When finished, press the button FN to continue to the next parameter.

Water Filter Alarm

Description

- This parameter allows the technician to preprogram an alarm that notifies the user when the water filter requires service or replacement.
- When the programmed volume of water has passed through the espresso machine the error message “Change Filter” is displayed.
- A value of 0 (zero) disables the filter alarm parameter.

Display	Operating Procedure
OFF 09:30	**1** Enter into “Machine Off” programming mode.
Language ENGLISH	**2** Scroll through the displayed parameters using the button FN until the following display appears:
Water filter 0	**3** Press the button – or the button + to change the value of the flasing parameter.
	4 When finished, press the button FN to continue to the next parameter.
Filter Alarm	**5** When the espresso machine has dispensed the value of this parameter the message FILTER ALARM will appear. **NOTE:** To reset this message turn off the espresso machine using the main power switch. Then, press and hold the button and the button and turn on the machine using the main power switch.
Filter Reset	Hold both buttons until the following message appears. Release both buttons and continue to use the espresso machine as normal.

Open Valve

Description

- This parameter allows the service staff to enable/disable the opening of the hot water valve.
- This parameter allows steam boiler depressurization.
- This parameter is not available on MP paddle version.

Display	Operating Procedure
OFF 09:30	**1** Enter into “Machine Off” programming mode.
Language ENGLI SH	**2** Scroll through the displayed parameters using the button FN until the following display appears:
OPEN VALVE DI SABLED/ ENABLED	**3** Press the button – or the button + to change the value between DI SABLED or ENABLED.
	4 When finished, press the button FN to continue to the next parameter.

Drain Steam Boiler

Description

- This parameter enables the technician to enable/disable the steam boiler draining.
- This parameter allows the service staff to renew or “regenerate” the water contained inside the steam boiler, discharging about one half of the water contained in the boiler.
- This procedure is recommended in case the machine should remain inactive for more than 8 hours and in any case at least on a weekly basis.

Display	Operating Procedure
OFF 09:30	**1** Enter into “Machine Off” programming mode.
Language ENGLISH	**2** Scroll through the displayed parameters using the button FN until the following display appears:
Drains SteamBoil DISABLED/ ENABLED	**3** Press the button – or the button + to change the value between DISABLED or ENABLED.
	4 When finished, press the button FN to continue to the next parameter.

Safety Valve

Description

- This parameter allows the service staff to enable/disable the safety valve test.
- This parameter allows to bring the steam boiler temperature to 140°C, thus triggering the safety valve. Once the valve has triggered disable the function.
- Should the safety valve fail to trigger within approximately one minute of the temperature reaching 140°C, disable the function and replace the valve.
- Only qualified technicians can perform this operation.

Display	Operating Procedure
OFF 09:30	**1** Enter into “Machine Off” programming mode.
Language ENGLI SH	**2** Scroll through the displayed parameters using the button FN until the following display appears:
TEST SAFETY VALV DI SABLED/ ENABLED	**3** Press the button – or the button + to change the value between DI SABLED or ENABLED.
	4 When finished, press the button FN to continue to the next parameter.

First Installation

Description

- This parameter allows the operator to reactivate the first installation message to the next power of the machine.

NOTE: Ensure all air is removed from the group prior to staring the espresso machine.

Display	Operating Procedure
OFF 09:30	**1** Enter into “Machine Off” programming mode.
Language ENGLISH	**2** Scroll through the displayed parameters using the button FN until the following display appears:
First installat. DISABLED/ ENABLED	**3** Press the button – or the button + to change the value between DISABLED or ENABLED.
	4 When finished, press the button FN to continue to the next parameter.

Water Volume Programming

Description

- This parameter allows the operator to program the water volume (shot volume) for the individual buttons on the keypad.
- The saved program is a number. This number relates to the number of pulses the flowmeter delivers to the CPU. Once the programmed number of pulses is received by the CPU, the flow of water is stopped.
- This parameter is not available on MP Paddle model as volume is manually controlled by use of paddle, except for the last button that controls the dose of hot water brewed.

Display	Operating Procedure
200.5°F 06:30 La Marzocco T:00	**1** Enter into “Machine On” programming mode. Press one of the following buttons:
Doses Setting Select within30s	**2**
	3 Water will begin to flow. When the desired amount of water has been dispensed, press the same button again to Stop the flow of water. The button is now programmed. Repeat this process for subsequent buttons.

Clock Adjust

Description

- This parameter allows the user to set the time of day and the day of the week.
- This parameter is used to display time and is also used by the “Auto On/Off” parameter
- There are 4 changeable values within this parameter:

- Hour
- Minute
- Day of week
- Hour Format 12h or 24h

Display	Operating Procedure
200.5°F 06:30 La Marzocco T:00	**1** Enter into “Machine On” programming mode.
Doses Setting Select within30s	**2** Press and hold the button FN to enter into programming mode.
Clock Adjust	**3** Then press the button to access the adjustable parameters.
	4 Press the button – or the button + to change the value of the flashing parameter.
Clock Adjust 09:30 thurs 12h	**5** Press the button FN to advance to the next value.
	6 When finished, press the button FN to continue to the next parameter.

Auto ON/OFF

Description

- This parameter allows the user to program the espresso machine to turn on at a preset time and turn off at a preset time.
- This feature also allows the espresso machine to remain in the off condition for one repeating closed day.

Display	Operating Procedure
200.5°F 06:30 La Marzocco T:00	**1** Enter into “Machine On” programming mode.
Doses Setting Select within30s	**2** Press and hold the button FN to enter into programming mode
Clock Adjust	**3** Then press the button to access the adjustable parameters.
Clock Adjust 09:30 thurs 12h	**4** Press the button – or the button + to change the value of the flashing parameter.
Auto On/Off On: --:-- Auto On/Off Off: --:--	**5** Press the button FN to advance to the next value.
Closed On ----------	**6** When finished, press the button FN to continue to the next parameter.

Coffee Boiler Temperature

Description

- This parameter is set at the factory at a preset nominal temperature.
- The temperature of the boiler is measured at the most critical point in the boiler where temperature fluctuation is the greatest.
- The temperature of the water exiting the group head is held constant by means of the mass of the group casting. Even though the temperature of the boiler may vary slightly, the temperature of the water exiting the group is constant.
- To properly calibrate the temperature of any espresso machine it is import to measure the temperature of the water exiting the group by means of an external temperature measuring device. The difference of the display temperature and the measured temperature may be compansated by use of the “Coffee T. Offset” parameter.

Display	Operating Procedure
200.5ºF 06:30 La Marzocco T:00	**1** Enter into “Machine On” programming mode.
Doses Setting Select within30s	**2** Press and hold the button FN to enter into programming mode.
Clock Adjust	**3** Then press the button to access the adjustable parameters.
	4 Scroll through the displayed parameters using the button FN until the following display appears:
Temp Cof. Boiler 94.6 ºC	**5** Press the button – or the button + to change the value of the parameter.
	6 When finished, press the button FN to continue to the next parameter.
	NOTE: It is also possible to change the temperature of the coffee boiler using the “Quick Keys”. Please see the section entitled “Quick Keys”

DANGER

THE STEAM BOILER CONTAINS WATER AT ELEVATED TEMPERATURES. WATER TEMPERATURE OVER 125 °F CAN CAUSE SEVERE BURNS INSTANTLY OR DEATH FROM SCALDING.

Steam Boiler Temperature

Description

- This parameter is set at the factory at a preset nominal temperature.
- The temperature of saturated water is proportional to the pressure inside the Steam Boiler. Therefore it is possible to regulate the pressure of the steam boiler by means of electronic temperature control. Please use the following tables as reference when setting the steam boiler temperature.
- The maximum permitted value for the temperature setting is 134°C.

Temperature	Pressure
247°F/119°C	1.0 bar
260°F/127°C	1.5 bar
272°F/133°C	2.0 bar

CAUTION

The saturation temperature of water will vary with ambient atmospheric pressure.
Tables in this manual are created for atmospheric pressure at sea level. Slight adjustment in temperature will be required for elevations other than sea level.

Display	Operating Procedure
200.5°F 06:30 La Marzocco T:00	**1** Enter into “Machine On” programming mode.
Doses Setting Select within30s	**2** Press the button FN to enter into programming mode
Clock Adjust	**3** Then press the button to access the adjustable parameters.
	4 Scroll through the displayed parameters FN using the button until the following display appears:
Steam Boiler Temp 134.0 °C	**5** Press the button – or the button + to change tthe value of the flashing parameter.
	6 When finished, press the button FN to continue to the next parameter. **NOTE:** It is also possible to change the temperature of the steam boiler using the “Quick Keys”. Please see the section entitled “Quick Keys”

DANGER

THE STEAM BOILER CONTAINS WATER AT ELEVATED TEMPERATURES. WATER TEMPERATURE OVER 125 °F CAN CAUSE SEVERE BURNS INSTANTLY OR DEATH FROM SCALDING.

Pre-Infusion or Pre-Brewing

Description

- This parameter allows the user to enable or disable the pre-brewing (also called pre-infusion) function.
- When enabled the user is able to program buttons 1-4. Each button may have different programming.
- Pre-brewing has two values to adjust for each button. “ON” time is the amount of time (in seconds) that the brew valve is open during during the prebrewing cycle. “OFF” is the amount of time (in seconds) that the brew valve is off during the prebrewing cycle. After the pre-brewing cycle has completed, the normal brew cycle continues until complete.
- This parameter is not available on MP paddle versione where pre-infusion is controlled manually by the paddle.

Display	Operating Procedure
200.5°F 06:30 La Marzocco T:00	**1** Enter into “Machine On” programming mode.
Doses Setting Select within30s	**2** Press the button FN to enter into programming mode.
Clock Adjust	**3** Then press the button to access the adjustable parameters.
	4 Scroll through the displayed parameters using the button FN until the following display appears:
PreBrewing enabled	**5** Press the button – or the button + to change the value of the parameter.
PreBrew ON sec Espresso 0.6	**6** When enabled, additional parameters are displayed, press the button – or the button + to change the value.
PreBrew OFF sec Espresso 0.1	**7** When finished press the button FN to continue to the next parameter. Repeat steps 6-7 for all 4 buttons. A value of zero disables this feature on the corresponding button. **NOTE:** It is also possible to enable and disable this parameter using the “Quick Keys”. Please see the section titled “Quick Keys”

EN

Service Phone

Description

- This parameter is a feature that can be used to store the telephone number for a service company.
- This telephone number will be displayed when service is required.

Display	Operating Procedure
200.5°F 06:30 La Marzocco T:00	**1** Enter into “Machine On” programming mode.
Doses Setting Select within30s	**2** Press the button FN to enter into programming mode
Clock Adjust	**3** Then press the button to access the adjustable parameters.
	4 Scroll through the displayed parameters FN using the button until the following display appears:
Service Phone X	**5** Press the button – or the button + to change tthe value of the flashing parameter.
	6 Press the button to advance to the next character. Repeat step 5-6 to program remaining characters
	7 When finished, press the button FN to continue to the next parameter.

Crono Function

Description

- When enabled, this parameter displays a timer that times each shot.
- The timer is reset each time a button on the keypad is pressed.
- When enabled, the Crono Function is continuously displayed.
  The programmable name will not be displayed when this parameter is enabled.

Display	Operating Procedure
200.5°F 06:30 La Marzocco T:00	**1** Enter into “Machine On” programming mode.
Doses Setting Select within30s	**2** Press the button FN to enter into programming mode.
Clock Adjust	**3** Then press the button to access the adjustable parameters.
	4 Scroll through the displayed parameters using the button FN until the following display appears:
Crono Function disabled	**5** Press the button – or the button + to enable or disable this parameter.
	6 When finished press the button FN to continue to the next parameter.

EN

Troubleshooting

- This espresso machine is equipped with several feedback mechanisms that alert the operator when an unusual condition occurs. Additionally the espresso machine will warn the operator when certain parameters fall below or above the programmed point. These errors and warnings will appear as a message in the display.
- The following section will describe errors and warnings that may appear in the display.

Message	Description	Message Solution
Corrupted Data	This message is displayed when the CPU does not understand an instruction.	Most likely the machine power was disconnected without first turning off the machine through the keypad and display. Turn off machine using main switch. This should clear the error.
Filling-up T-out Alarm	This message is displayed when the CPU does not detect a full signal from the steam boiler within a set time interval.	When this message is displayed the CPU also shuts down and turns the machine off. Water is not entering the boiler. Call an authorized service technician to repair this fault.
T. Probe Unconnect Boiler temp.	This message is displayed when the CPU does not receive any signal from the Safety Probe in the steam boiler.	When this message is displayed the CPU turns off power to the steam boiler heating element. The only way to reset this error is to repair the Safety Probe to restore the signal to the CPU.
Flowmeter Alarm	This message is displayed when the CPU does not receive the appropriate signal from the flowmeter. This message is not active in MP machines.	When flowmeter alarm is displayed, the light on the button that initiated the brew cycle will begin to flash. This problem is a result of water not flowing through the flow meter. This can be caused by coffee ground too fine or packed too tightly (try a coarser grind or lighter tamping) or a blockage in the tubes, a malfunctioning water pump, a faulty valve, or a damaged flowmeter. Call a service technician to fix this problem.